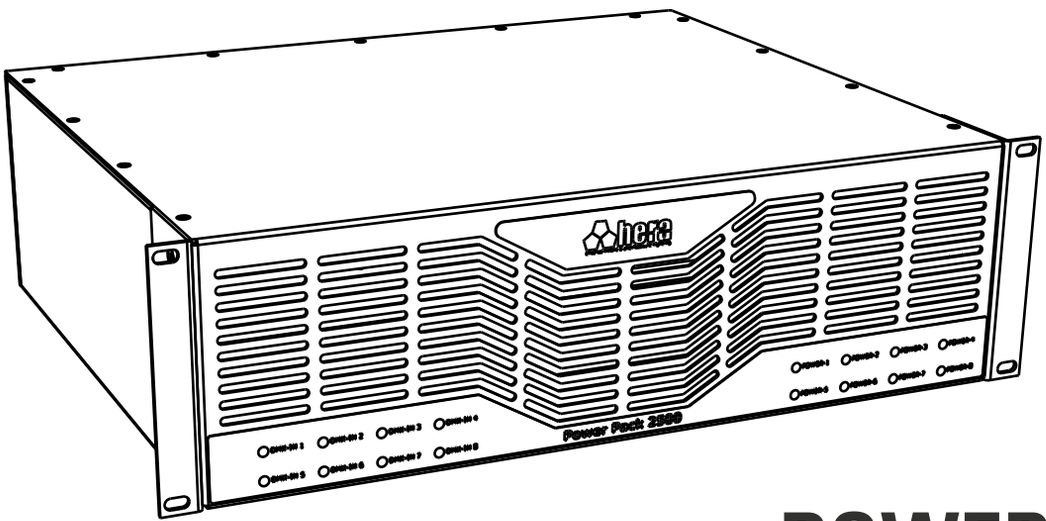

POWER PACK® 2500

User's Manual & Installation Guide

Index V1.2

1 Cover & Index

2 Safety Information
Warranty
Marking

3 Explanation
Details
Ordering Information

4 Block Diagram

5 Connection Diagram

6 Products Table

7 Connection Diagram
Accessories

8 Technical Drawing

9 Back Cover

Congratulations on choosing a HERA product!
We thank you for your custom.
Please note that this product, as all the others in the rich HERA range, has been designed and made with total quality to ensure excellent performance and best meet your expectations and requirements. Carefully read this instruction manual in its entirety and keep it safe for future reference. It is essential to know the information and comply with the instructions given in this manual to ensure the fitting is installed, used and serviced correctly and safely. HERA disclaims all liability for damage to the fitting or to other property or persons deriving from installation, use and maintenance that have not been carried out in conformity with this instruction manual, which must always accompany the fitting. HERA reserves the right to modify the characteristics stated in this instruction manual at any time and without prior notice.

Safety Information

Caution – unplug the power supply from the main power before connecting any cables as this can damage the products.

Caution – avoid looking directly into the led light source at close range for your own safety.

Any people installing this product should comply with local standards and regulations and must be qualifed for the handling of electrical equipment.

- Do not attempt to install or use the product until installation instructions and safety labels are fully understood. This product is designed for indoor and outdoor usage.
- Ensure product operates within the specifed temperature range.
- Do not attempt to open the product.
- Do not use the product if the power cables are damaged.
- Only use product for specifed voltage.
- Always maintain connection to ensure waterproofing.
- If the product has been subjected to drastic temperature variances, for example, following transportation, do not connect the fixture until it has reached room temperature, as moisture condensation may cause electric shock and product damages.
- When installing the products and system power supplies, please ensure they will not be exposed to moisture and extreme heat (and direct sunlight for outdoor products). Besides, keep a clean operating environment for the fixtures and system power supplies.
- Please study this Installation Guide thougly and check the lates Tecnical Specification Sheets available from the our website www.heraled.com before setup.
- Any non-compliance of the Installation Guide will void the Hera warranty.

Warranty

Hera warrants the products for a period of three (3) years from date of purchase, provided that the purchased items are used under the conditions stated in this user manual.

Marking

CE FC RoHS compliant IP20

Explanation

Hera Power Pack® 2500; consists of 8x320Watt power supply unit. DMX signal has been transformed into single connector with power units and exits as 5 Pin Push-Lock. It has 90~264VAC 50/60Hz Universal operating voltage and 8x320 Watt power. It has active PFC. It has standard 19inc 3U Rack type. It is manufactured at two different types as 24V and 48V. It has been shaped from plate, having aluminum body. It is produced RAL9004 black as a standard

- Legendary solution in long distance DMX transmission
- DMX input and output with standard Neutrik® DMX connectors
- Ac Power input Neutrik® PowerCon® (NAC 3MPA)
- Power output with 5 Pin Push-Lock connectors
- It is cooled down with built in fan
- Safe use in interior spaces with IP20 protection

Details

Power Supply	: Internal Power Supply 8x320 Watt With Active PFC
Input	: 90~264VAC 50/60Hz Universal AC input / Full range AC Input Connector Neutrik® PowerCon® (NAC 3MPA
Output	: Output 5-Pin IP67 Waterproof Connector (Power + DMX) DMX Signal Input and Output 3 Pin XLR
Housing	: Aluminium Sheet Metal With Powder Finishing
Screw and Mounting Accessories	: Black Iron
Temperature	: Operating : -40°C - 50°C - (-40° - 122° F) Storage : -40°C - 85°C - (-40°C - 185° F)
Dimensions (H x W x D):	: 132x483x366 mm (5,19x19x14,4 in)
Weight	: 0,12 kg (0,264 lb)
Certification	: EU safety: EN 60950 EU EMC: EN 55103-1, EN 55103-2, EN 55022, EN 55024, EN 61000-3-2, EN 61000-3-3 US safety: ANSI/UL 60950-1

Ordering Information

Power Pack® 2500-48 8x320W Power Supply	P08003
Power Pack® 2500-24 8x320W Power Supply	P08011

Block Diagram

Indoor Zone

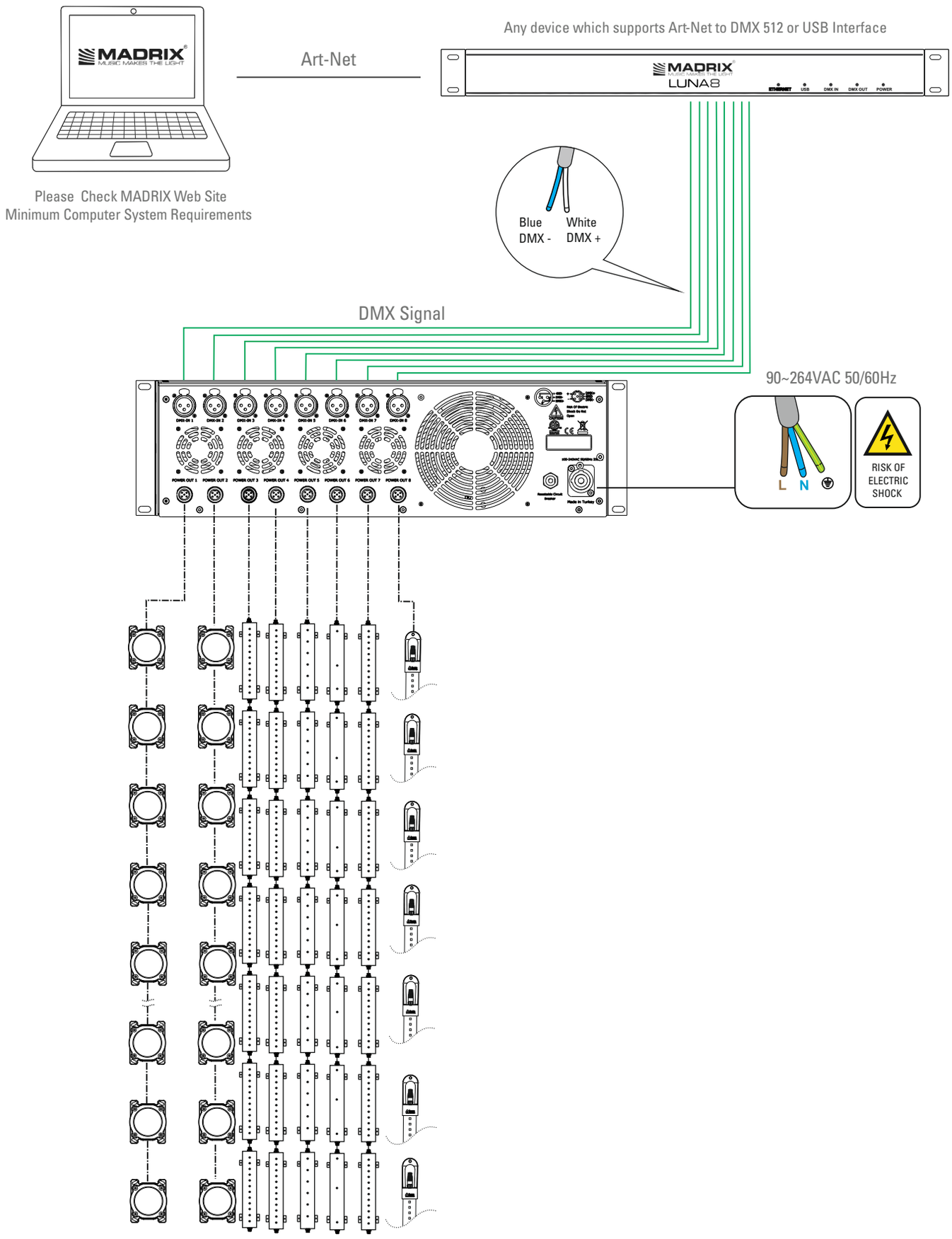

Please Check MADRIX Web Site
Minimum Computer System Requirements

Outdoor Zone

Connection Diagram

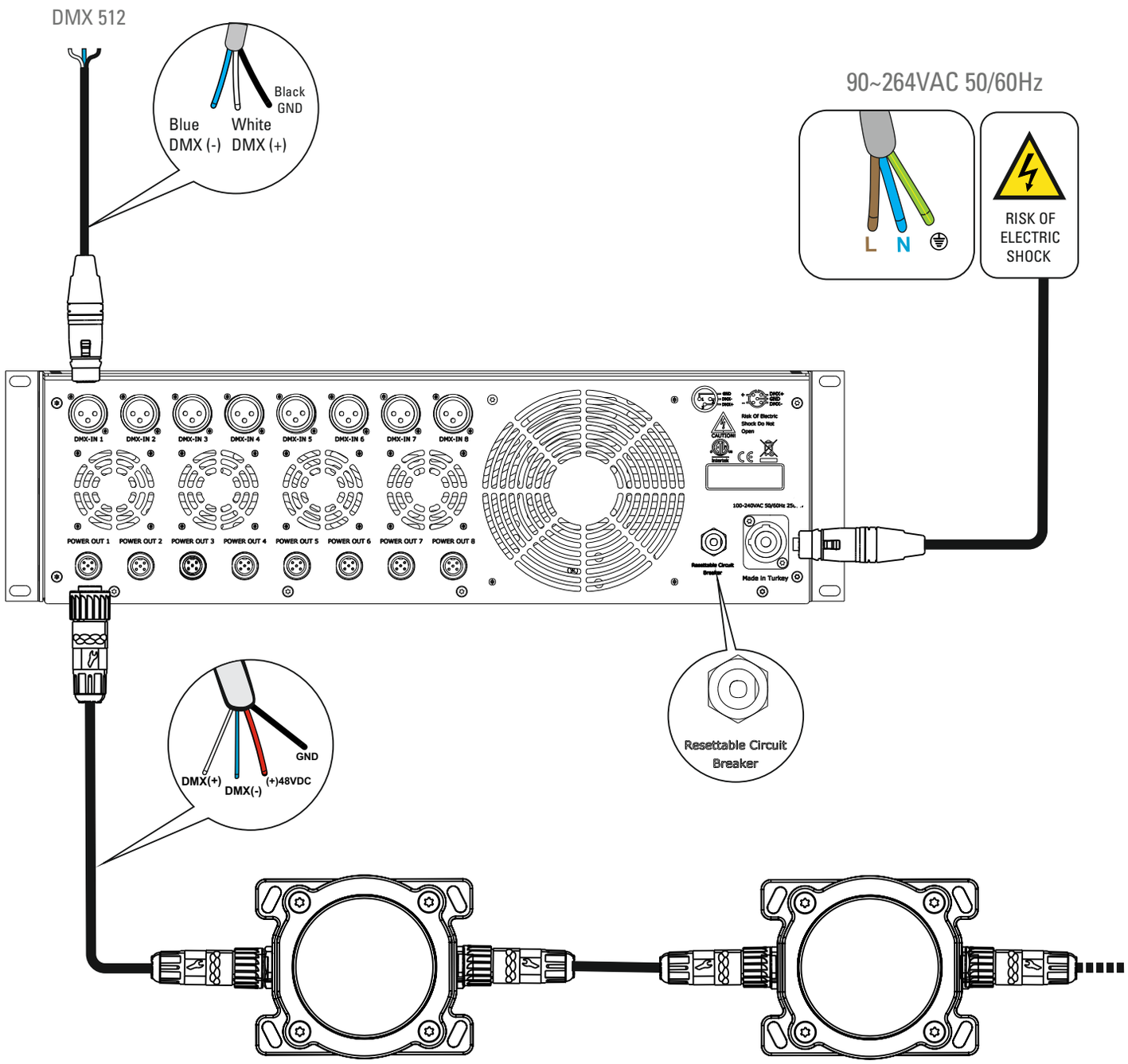

*Please check 6. page for numbers of product connection

Products Table

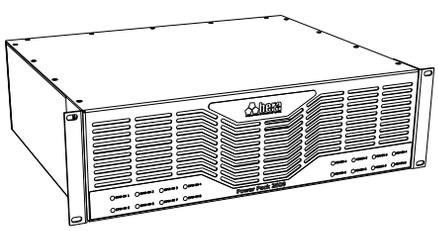

8 X

32 pcs. PD®60S Pixel Dot Series
Pd®60 Pixel Dot Series

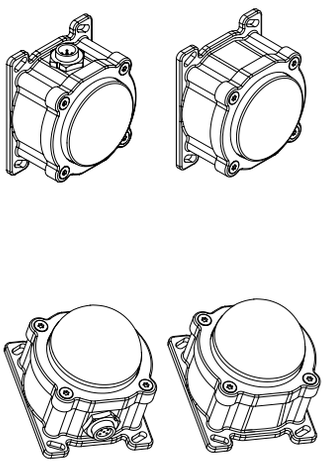

32 pcs. PD®60S Dome Pixel Dot Series
Pd®60 Dome Pixel Dot Series

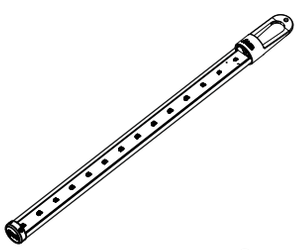

12 pcs. Vertical Tube® Series 50cm
6 pcs. Vertical Tube® Series 100cm
4 pcs. Vertical Tube® Series 150cm
3 pcs. Vertical Tube® Series 200cm

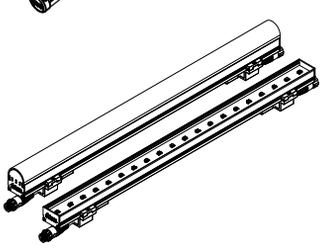

14 pcs. Sword® 25x1Series 30cm
8 pcs. Sword® 25x1Series 50cm
4 pcs. Sword® 25x1Series 100cm
2 pcs. Sword® 25x1Series 150cm

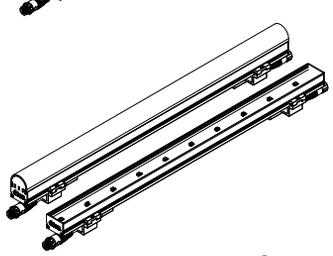

28 pcs. Sword® 50x1 Series 30cm
17 pcs. Sword® 50x1 Series 50cm
8 pcs. Sword® 50x1 Series 100cm
5 pcs. Sword® 50x1 Series 150cm

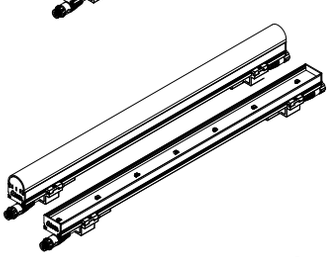

32 pcs. Sword® 100x1 Series 30cm
32 pcs. Sword® 101x1 Series 50cm
17 pcs. Sword® 101x1 Series 100cm
11 pcs. Sword® 101x1 Series 150cm

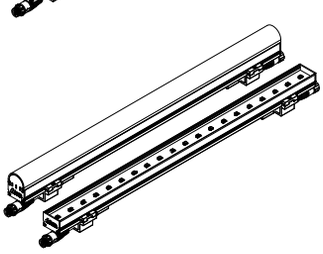

32 pcs. Sword® 100x4 Series 30cm
32 pcs. Sword® 101x4 Series 50cm
17 pcs. Sword® 101x4 Series 100cm
11 pcs. Sword® 101x4 Series 150cm

Connection Diagram

1 Push arrow direction

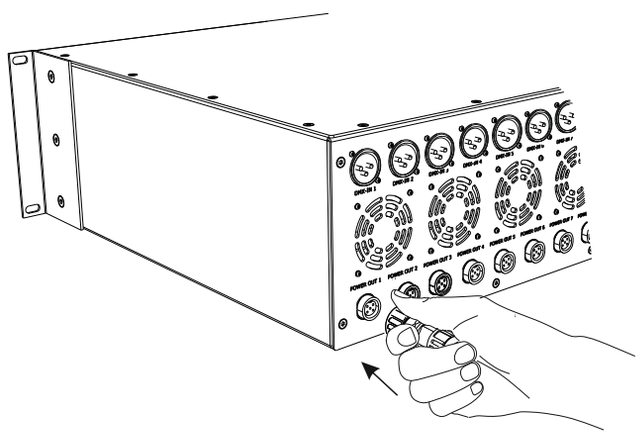

2 Turn to left and pull for removing.

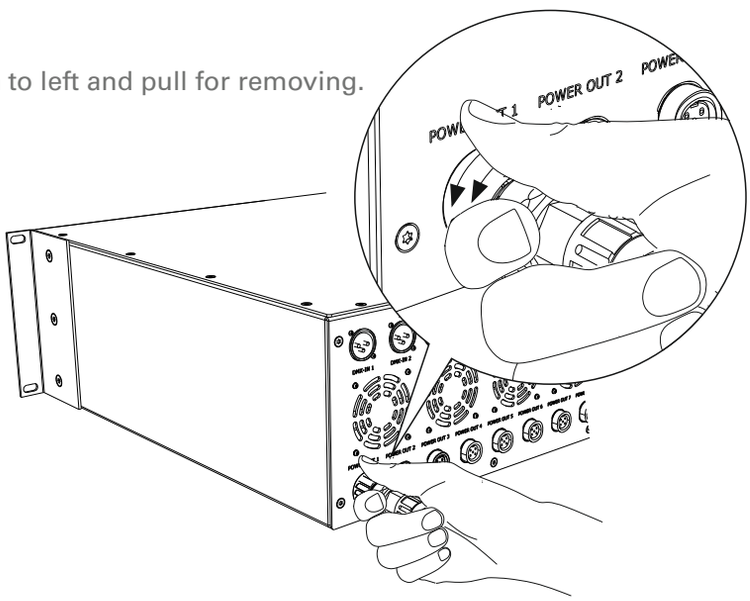

Accessories

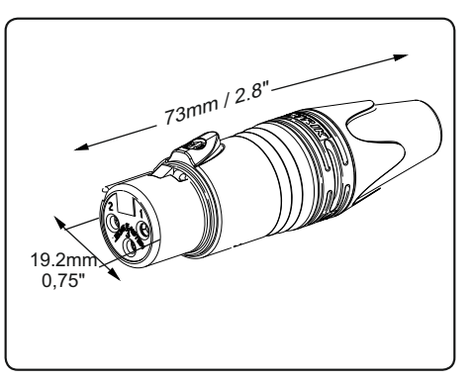

A01014
NC3FXX 3 Pole Female XLR Connector
Optional

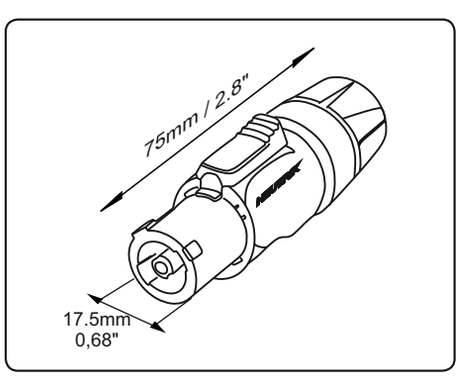

A01019
NAC3FCA powerCON 20A Power In
Standard

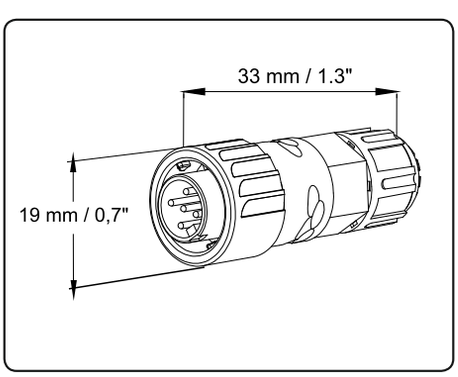

A01020
5 Pole Female IP67 Push-lock Connector
Standard
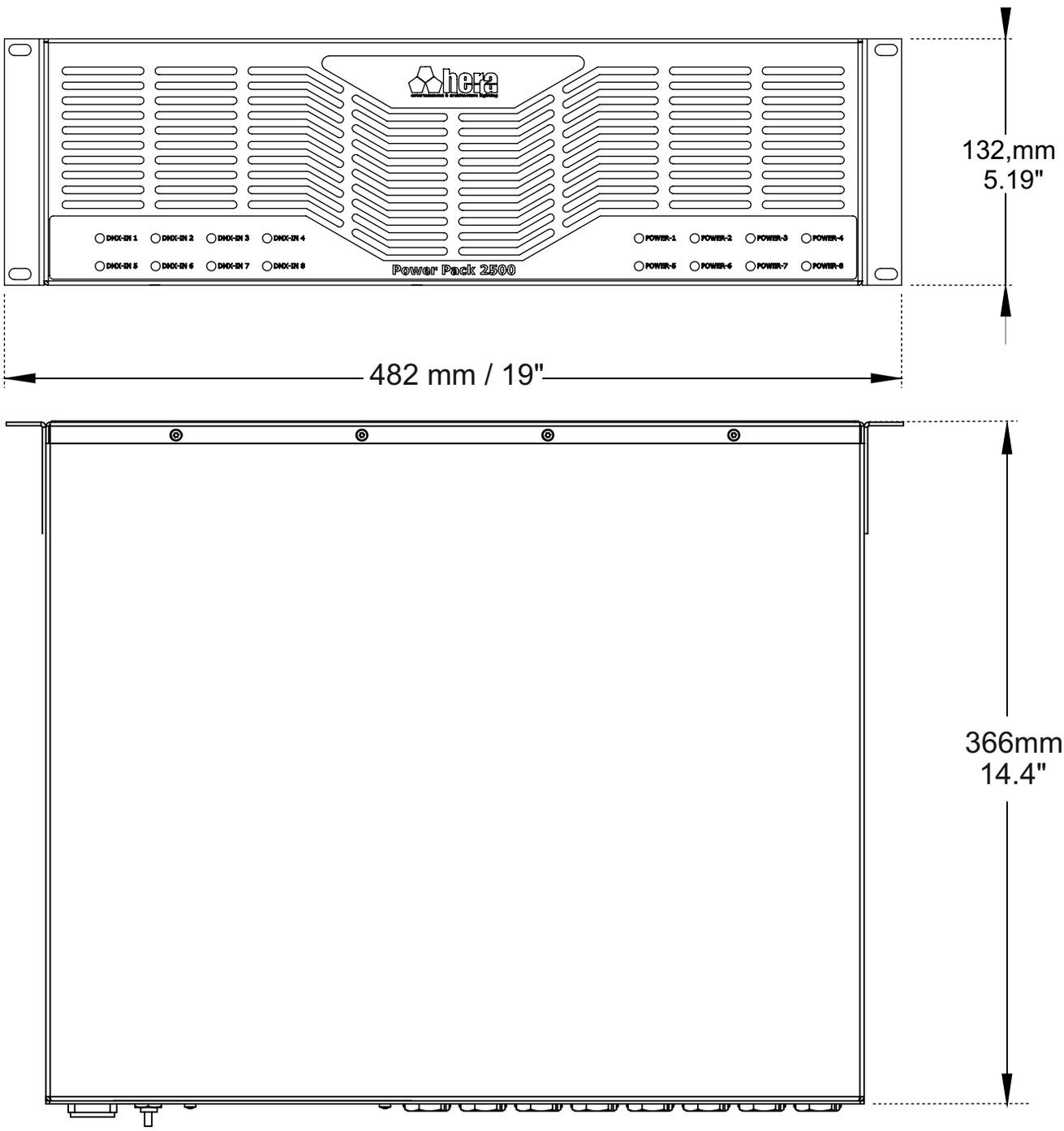
Technical Drawing