eldoLED

your product | *our drive*

Tech sheet POWERdrive 106 — AC Series

Electrical Specifications

POWERdrive 106/A

Input

- Voltage: 120 - 250 VAC, 50-60Hz
  UL approved: 120 - 277 VAC, 50-60Hz
- Current, max: 1.05A at 120V/60Hz, 0.5A at 230V/50Hz, 0.45A at 277V/60Hz

POWERdrive 106/S

Output

- Power: 100W max
- Voltage: 60V max, 57V typ
- Current range: 200 - 1,050 mA (configurable)
- Current: +/- 5% accuracy

POWERdrive 106/M

General

- Standby power: < 0.5W
- Inrush current: 35A 240µs at 120V/60Hz,
  67A 240µs at 230V/50Hz, 75A 240µs at 277V/60Hz
- Surge protection: 3kV (L to N), 4kV (L/N to GND)
- Efficiency: 90% at full load, ≥ 87% above 50W output
- Power factor: > 0.94
- THD at 100% load, max: <10%
- DMX / RDM: USITT DMX512A and ANSI E1.20 (explore & address)
- DALI: IEC 62386-207

Use cases

	4 LED outputs, per output:	4 LED outputs, per output:	4 LED outputs, per output:	4 LED outputs, per output:	4, 3, 2 or 1 LED output per output:
Power, max: 100W	25 W	25W	25W	25W	≤ 60W *
Voltage (Vf), max: 57V	57V	50V	35.7V	23.8V	≤ 57V
Current range: 200 - 1,050mA	400mA	500mA	700mA	1,050mA	≤ 1,050mA **

* Total power output driver: 100W max

** LED output current is configurable

Dimensions and weight

POWERdrive 106/A

Weight: 890 g, 31.4 oz

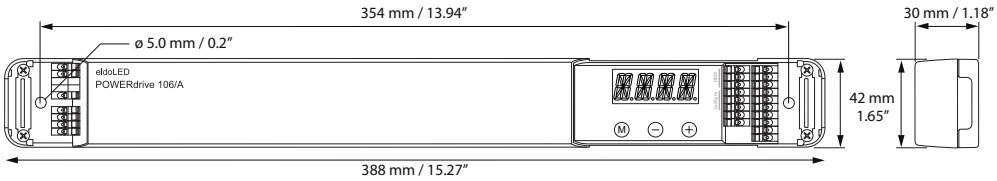

POWERdrive 106/S

Weight: 915 g, 32.3 oz

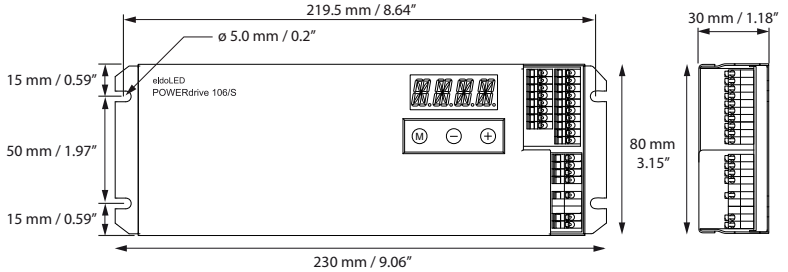

POWERdrive 106/M

Weight: 810 g, 28.6 oz

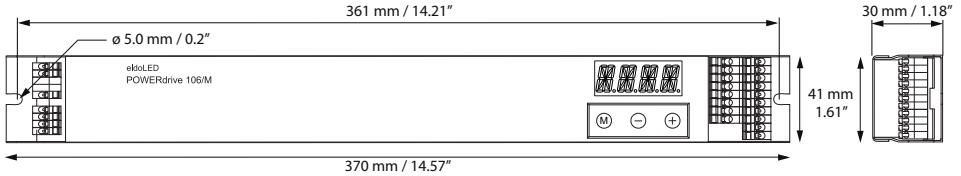

© 2012 eldoLED. All rights reserved. V1.5

Wiring data

- Wire type: solid or stranded copper
- Wire strip length: 9mm, 0.35 in.
- Wire core cross section:
  0.5 - 1.5 mm², AWG 20 - 16

- Maximum LED wiring length:

AWG value	20	19	18	17	16
Distance (m)	14	18	22	28	36
Distance (ft)	46	59	72	92	118

POWERdrive 106/A

In Europe, use a H03V 0.75mm² power cable for the 106/A and apply following strip lengths:

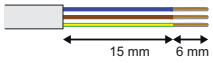

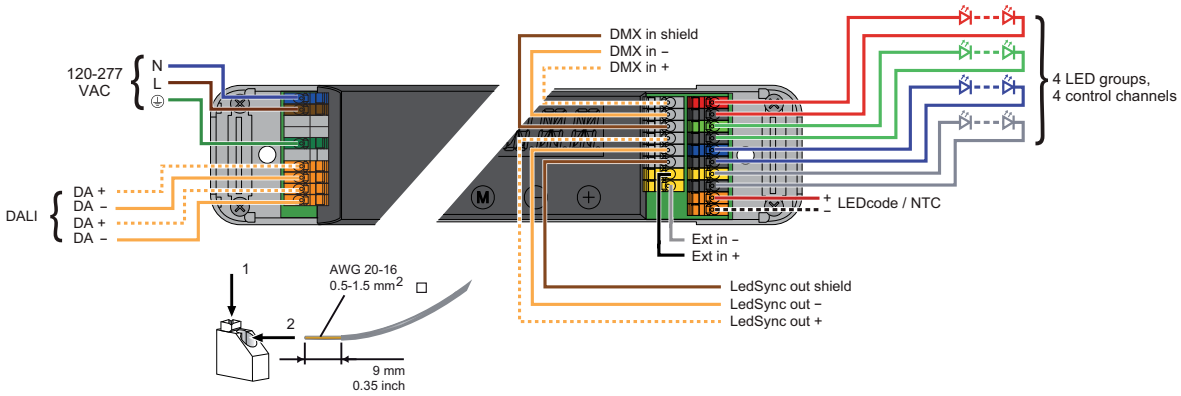

POWERdrive 106/S

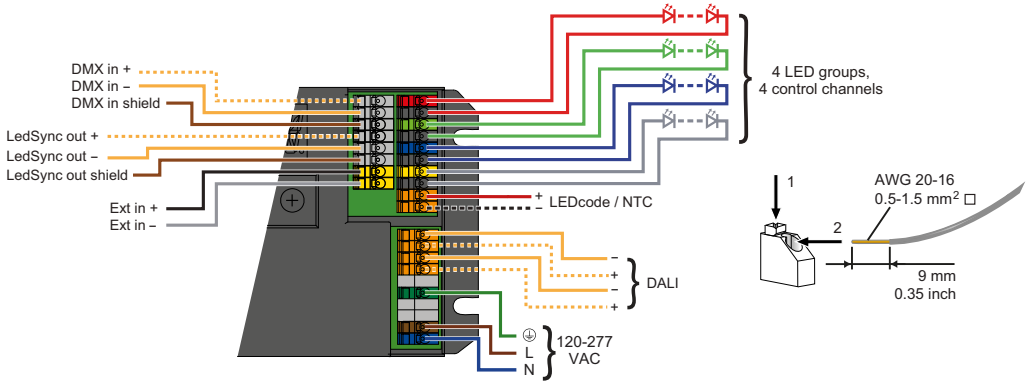

POWERdrive 106/M

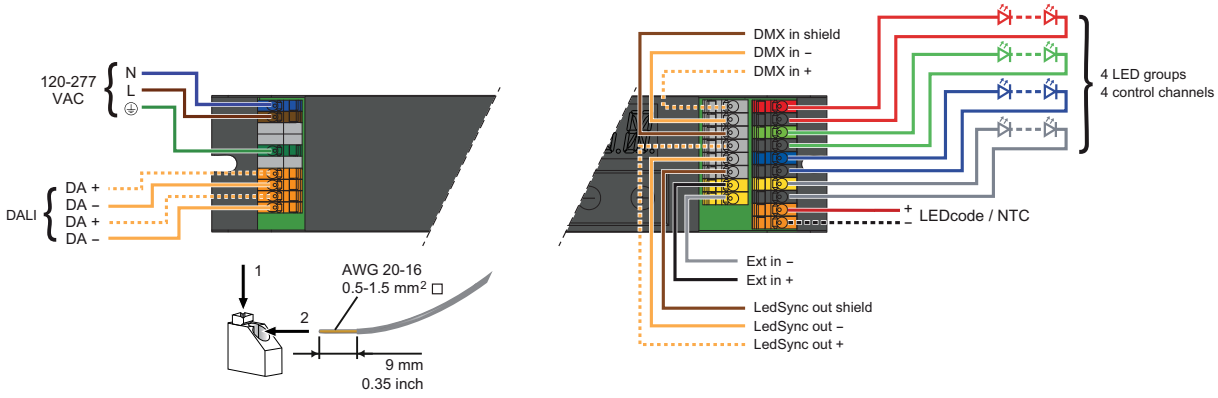

WARNING: Risk of electrical shock. May result in serious injury or death. Disconnect power before servicing or installing.

CAUTION: The device may only be connected and installed by a qualified electrician. All applicable regulations, legislation and building codes must be observed. Incorrect installation of the device can cause irreparable damage to the device and the connected LEDs.

CAUTION: Pay attention when connecting the LED groups: polarity reversal results in no light output and often damages the LEDs.

© 2012 eldoLED. All rights reserved. V1.5

Other information

Thermal data

- Ta range: -40 ºC ... +50 ºC / -40 ºF ... +122 ºF
- Tc max: POWERdrive 106/A 90 ºC / 194 ºF
  POWERdrive 106/M 85 ºC / 185 ºF
  POWERdrive 106/S 83 ºC / 181 ºF
- Typical self-rise of 30 ºC / 83 ºF at maximum load in free air without heat sink
- LED temperature feedback using 47kΩ NTC thermistor.
  Recommended thermistors by Vishay:
  - NTCS0805E4473JXT (SMD version)
  - 238164063473 (leaded version)
  - NTCASCWE3473J (screw version)

Certifications

- IEC 61347-1, IEC 61347-2-13, IEC 62384 + A1, EN 55015 + A1, EN 55022 + A1, IEC 61000-3-2, IEC 61547, IEC 62386-207
- CE
- ENEC by VDE
- UL: Recognized Component for US and Canada (file no E333135), according to UL1310, UL8750.
  US: Class 2 output. Canada: Non-Class 2 output.
- Class A sound rating
- FCC: Title 47CFR Part 15 Class B
- The wiring inside electrical enclosures shall comply with the 600V/105 ºC or higher.

Lifetime data

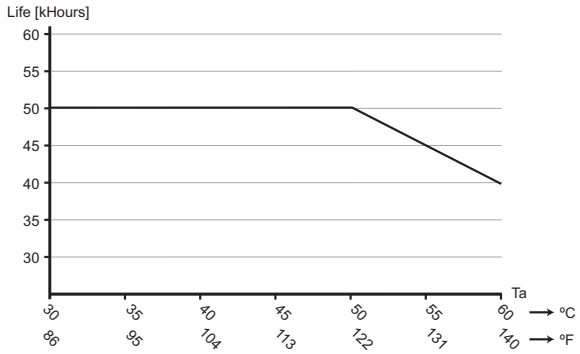

Life vs Ta

- Life expectancy of 50K hours at Ta of lower or equal to 50 ºC / 122 ºF
- MTBF: 480,000 hours

All measurements have been carried out at maximum load in free air without heat sink.

All lifetime-related figures are the result of simulations. Actual lifetime tests are ongoing.

Efficiency data

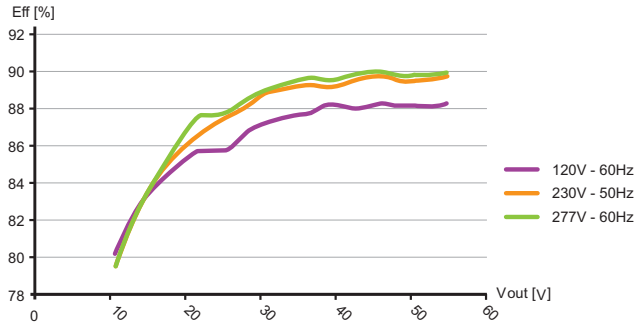

Efficiency vs Vout at Ta 25 ºC / 77 ºF

Power factor data

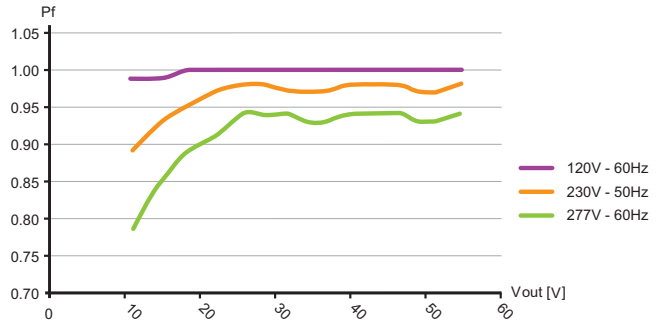

Power factor vs Vout at Ta 25 ºC / 77 ºF

Europe, Rest of World
eldoLED Europe bv
Luchthavenweg 18a
NL-5657 EB Eindhoven
The Netherlands
T: +31 40 2054050
F: +31 40 2054058
E: info@eldoled.com

North America
eldoLED America, Inc.
1762 Technology Drive #226
San Jose, CA 95110
USA
T: +1 408 451-9333
F: +1 408 451-9335

Sales support US/Canada: nasales@eldoled.com
Sales support Rest of the World: sales@eldoled.com

Other documentation and support

Visit www.eldoled.com/ACsupport for further documentation such as quick start guide, wiring diagram, tech sheet and 3D IGES files.

Warranty

eldoLED represents and warrants that for a period of 3 (three) years, as of the date of invoice, Products materially meet the specifications and specifically agreed upon quality, both as stated in the applicable datasheet and/or written design-in specifications, or as stated in writing otherwise by eldoLED, provided that these specifications are explicitly designated by eldoLED as "warranted specifications".
For the complete warranty text, visit www.eldoled.com/terms.

© 2012 eldoLED. All rights reserved. V1.5

Notes

© 2012 eldoLED. All rights reserved. V1.5